ERSKINE®
ATTACHMENTS LLC

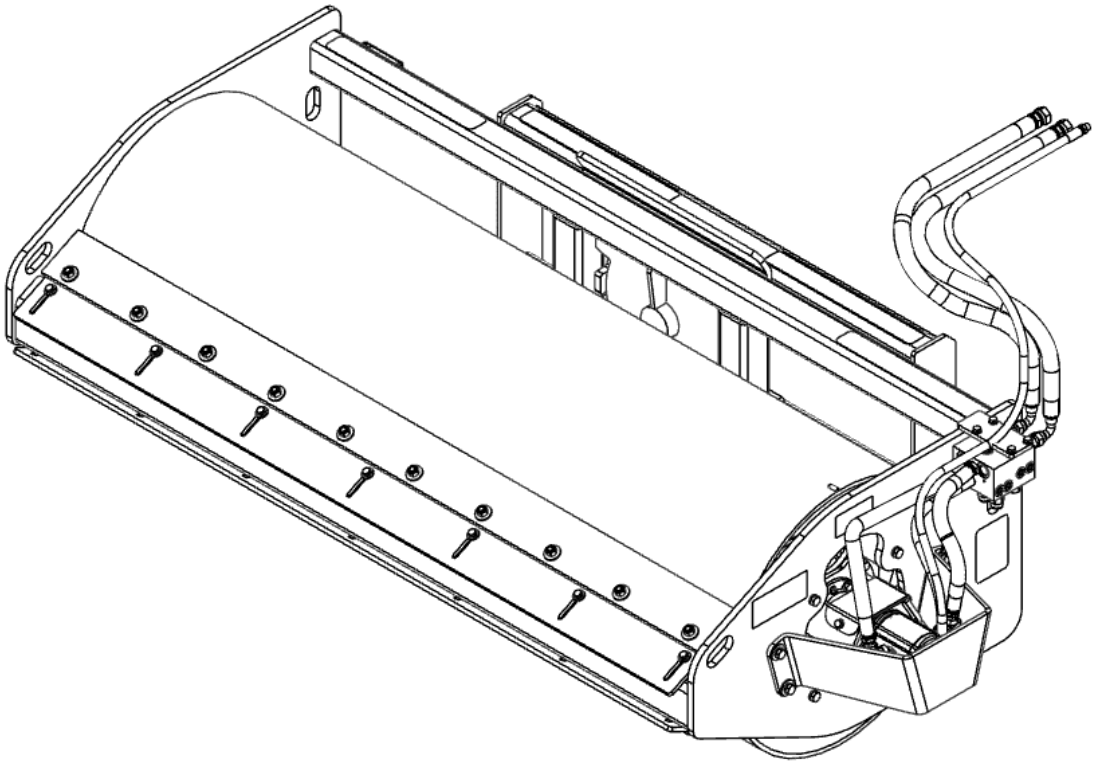

VIBRATORY PACKER
MODELS 72" / 80"

Operator's Manual
Maintenance & Parts Information

Read this Manual Before Use

TABLE OF CONTENTS

SAFETY	3-4
DECAL INFORMATION	5-6
MOUNTING INSTRUCTIONS	7-8
OPERATING INSTRUCTIONS	9
ROUTINE MAINTENANCE	10-12
TORQUE INFORMATION	13
PARTS INFORMATION	14-19
GENERAL SPECS	20
NOTES	21-22
WARRANTY	23

NOTE: Write your serial number for your attachment in the spaces below. Always refer to this serial number when calling for services parts.

_____

Serial Number

_____

Attachment Dealer

_____

Address

_____

Phone Number

_____

Contact

NOTE: Erskine Attachments LLC reserves the right to make improvements in design or changes in specifications at any time without notice and without incurring any obligations to install them on units previously sold.

SAFETY

DO NOT use or perform maintenance on this machine until this manual has been read and understood. In addition, read the Operation and Maintenance Manual(s) pertaining to the attachment and the attachment carrier ("Loader").

The user is responsible for inspecting the machine daily, and for having parts repaired or replaced when continued use of the machine would cause damage, excessive wear to other parts or make the machine unsafe for continued operation.

If an operating procedure, tool device, maintenance or work method not specifically recommended is used; you must satisfy yourself that it is safe for you and others. You must also ensure that the attachment will not be damaged or made unsafe by the procedures you choose.

Erskine Attachments LLC cannot anticipate every possible circumstance that might involve potential hazard. The safety messages found in this manual and on the machine are therefore not all inclusive

The signal words **CAUTION, WARNING,** or **DANGER** are used to indicate hazards.

⚠ CAUTION
Indicates a potentially hazardous situation which, if not avoided, may result in minor or moderate injury.

⚠ WARNING
Indicates a potentially hazardous situation which, if not avoided, could result in death or serious injury.

⚠ DANGER
Indicates a potentially hazardous situation which, if not avoided, will result in death or serious injury.

The word **IMPORTANT** is used in the text when immediate damage will occur due to improper technique or operation**.**

The word **NOTE** is used to convey information that is out of context with the manual text; special information such as specifications, techniques, reference information, and other information of a supplementary nature.

SAFETY

Improper operation can cause serious injury or death.

PRE-OPERATION

- **NEVER** use this attachment for purposes other than intended.
- Read the operator's manual for the "Skid Steer Loader". **NEVER** allow untrained people to operate.
- Operating instructions must be given to everyone before operating this machine and at least once a year thereafter in accordance with OSHA regulations.
- **NEVER** exceed the maximum recommended input power or speed specifications for the attachment. Over-powering or over-speeding the attachment may cause personal injury and/or machine damage.
- Keep all shields, guards, and covers in place.
- Do not modify equipment or add attachments that are not approved by Erskine Attachments LLC.
- Use adequate safety warning lights and devices as required by local regulations. Obey all local laws and regulations regarding machine operation on public property.

OPERATION

- Always wear eye protection that meets z87.1 or use with a loader enclosure that provides similar protection.
- Hydraulic connections may be hot after use. Use gloves if connecting or disconnecting after use.
- Check and be sure all operating controls are in neutral before starting the engine.
- Keep people away from loader and attachment when in use. This attachment send objects flying and has rotating parts. NEVER direct discharge toward people - rocks and debris can be thrown.

OPERATION (continued)

- Depending on how this attachment is used, dust can be created. Prolonged exposure to dust can cause chronic and acute health problems. A NIOSH-approved respirator may be required.
- **NEVER** operate near embankments or terrain that is so steep that rollover could occur.
- Always stay in the operator position when using the attachment.
- Before leaving the operators position, disengage hydraulic drive, lower the attachment to rest flat on the ground, stop engine, set park brake, and wait for all motion to stop.
- **NEVER** place hands in the discharge area or clear debris while engine is running.

AVOID HIGH PRESSURE FLUIDS HAZARD

- Escaping fluid under pressure can penetrate the skin causing serious injury.
- Avoid the hazard by relieving the pressure before disconnecting hydraulic lines.
- Use a piece of paper or cardboard, **NOT BODY PARTS**, to check for suspected leaks. Wear protective gloves and safety glasses or goggles when servicing or performing maintenance on hydraulic systems.
- If an accident occurs, see a doctor immediately. Any fluid injected into the skin must be surgically removed within a few hours or gangrene may result.

MAINTENANCE

- **NEVER** make adjustments, lubricate, clean, or perform any service on the machine while it is in operation.
- Make sure the attachment is serviced on a daily basis. Improper maintenance can cause serious injury or death in addition to damage to the attachment and/or your equipment.

DECAL INFORMATION

Serial Number Location:
It is important to refer to the serial number of your attachment when making repairs or ordering parts. Early or later models (identification made by serial number) may use different parts, or it may be necessary to use different procedures in doing a specific operation. Please see below for Serial Plate location.

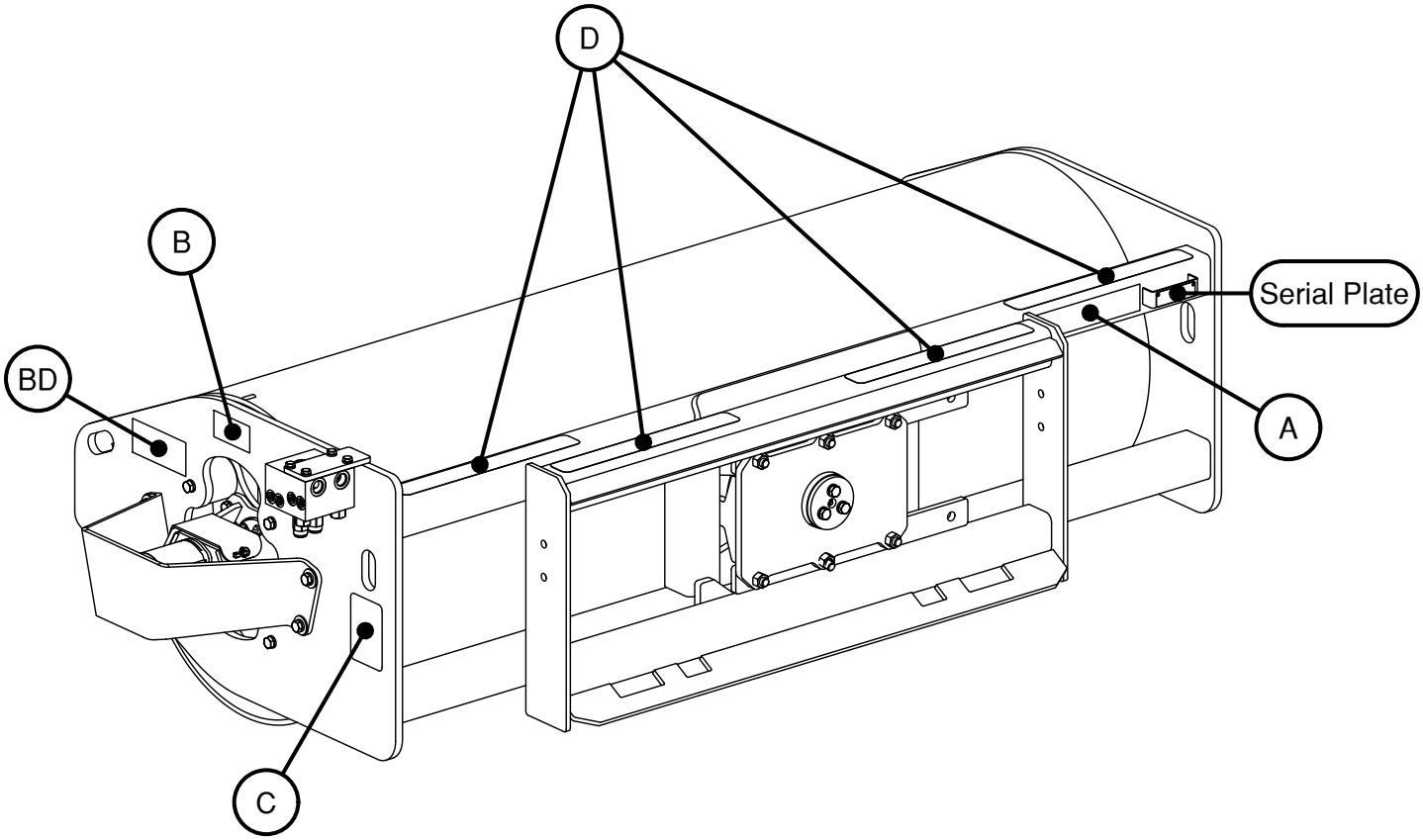

DECAL INFORMATION

A

Part number: 314526
Location: on frame, between mount frame and serial plate bracket
Quantity: 1

B

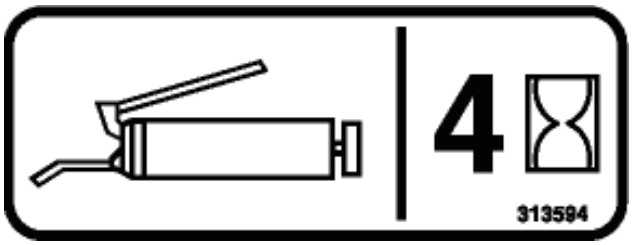

Part number: 313594
Location: On each endplate above cutouts
Quantity: 2

C

Part number: 200001
Location: Left side end plate, below rear lift slot
Quantity: 1

D

Part number: 202153 (ANTI-SKID TAPE 2 X 16)
Location: Top of frame and mount tubes
Quantity: 4

BD

Brand Decal: Small
Location: On each endplate
Quantity: 2

Safety Decals Locations:
The locations of the safety decals are shown. If these decals are missing, damaged, or painted over they must be replaced. Call Erskine Attachments LLC (218-435-4045) for replacement decals.

MOUNTING INSTRUCTIONS

After the initial set-up assembly is completed use the following procedure to mount the attachment to the loader for user operation.

⚠ WARNING

Coupler wedges or pins must extend through holes in attachment. Levers must be fully down and locked. Failure to secure wedges or pins can allow the attachment to come off and cause injury or death.

1. Use the step, safety treads, and grab handles to get on and off the loader and attachment.

2. Sitting in the operator's seat, lower seat bar (if so equipped) and fasten the seat belt.

3. Drive the loader to the rear of the attachment. Put the loader Erskine Attachments coupler into the attachment mounting bracket.

4. Tilt the loader coupler backward a small amount until it is fully engaged in the attachment mounting bracket.

5. Stop the engine and engage the park brake.

6. Secure the coupler locking mechanism that attaches the attachment to the loader.

7. Connect the hydraulic quick couplers from the attachment to the loader.

IMPORTANT: Wipe the ends of the hydraulic quick couplers (both lead and loader) with a rag to remove any possible contamination. Contamination can cause hydraulic components to fail and is not covered under warranty.

IMPORTANT: Make sure the quick couplers are fully engaged. If the quick couplers do not fully engage, check to see that the couplers are the same size and brand. Do not force the quick couplers together.

MOUNTING INSTRUCTIONS

NOTE: See the loader's operator's manual for auxiliary hydraulic specifications and connection instructions.

NOTE: Attachment is shipped with 12FJX (1-1/16" Female JIC Swivel) fittings on the ends of the lead hoses.

8. Make sure hoses and harness are routed properly to fit your specific loader. If the hoses are not routed properly, hoses may get pinched or rub on tires. Be sure to check the hose routing through the full range of intended motion of the attachment before operating it.

IMPORTANT: Proper hose and harness routing is the responsibility of the owner and/or operator. Pinched or stretched hoses and harnesses are not covered under warranty.

NOTE: More than one routing may be acceptable depending on the loader. Pick the routing that best suits your loader.

NOTE: Mounting is now complete and the attachment is ready for operation. Use reverse order of above instructions to dismount the attachment from the loader.

OPERATING INSTRUCTIONS

1. With the operator in the seat of the loader, the seatbelt fastened, and the seat bar lowered (if so equipped), start the engine.

2. With the loader arms fully lowered, position the attachment flat on the ground.

3. With the loader engine RPM at an idle, engage the auxiliary hydraulics in continuous flow mode to operate the attachment motor in the desired direction.

   IMPORTANT: Only engage and disengage the auxiliary hydraulics with the loader engine RPM as low as possible. Failure to do so will result in premature coupler wear.

4. Gradually increase the loader engine speed until the attachment has reached its maximum RPM.

   IMPORTANT: The attachment has an RPM limiter for the motor. When the motor has reached this limit, DO NOT continue increasing loader engine RPM. Doing so will increase the heat in the skid steer hydraulic system.

5. Slowly drive forward or backward to begin compacting in the desired direction.

   IMPORTANT: Raise the attachment off of the ground when turning.

   NOTE: The direction that the motor rotates influences how well the drum will roll along the ground as the attachment is driven in either the forward or reverse directions. Operate the motor accordingly.

6. Down pressure may be applied to the attachment by raising the skid steer's front tires off of the ground by 1" to 2". This will increase the compaction capabilities of the attachment. However, do this in a limited fashion, as the added weight will shorten the lifespan of the isolation mounts.

ROUTINE MAINTENANCE

⚠ WARNING

Lower the attachment to rest flat on the ground, shut down the engine, relieve the hydraulic pressure to the attachment, set the park brake, and wait for all motion to stop before leaving the operator's seat to perform service of any kind.

It is the operator's responsibility to make daily inspections of the loader and attachment for damage, loose bolts, fluid leaks, or anything else that could cause a potential service or safety problem. Preventive maintenance is the easiest and least expensive type of maintenance.

IMPORTANT: Bolts can loosen after initial usage. After the first hour of operation check all bolts.

LUBRICATION

Use No. 2 lithium base gun grease when lubricating all attachment grease fittings.

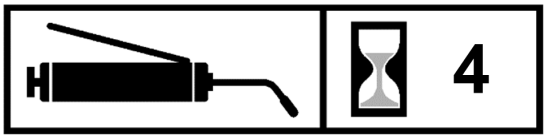

Roll the drum until the weld mark on the motor side is up, as shown, to position the hub bearing zerks for greasing.

Grease the two hub bearing zerks **[A]** and the two flange bearing zerks **[B]** every **4 hours** of operation.

IMPORTANT: Do not over-grease bearing. Only add **two pumps** of grease every greasing interval.

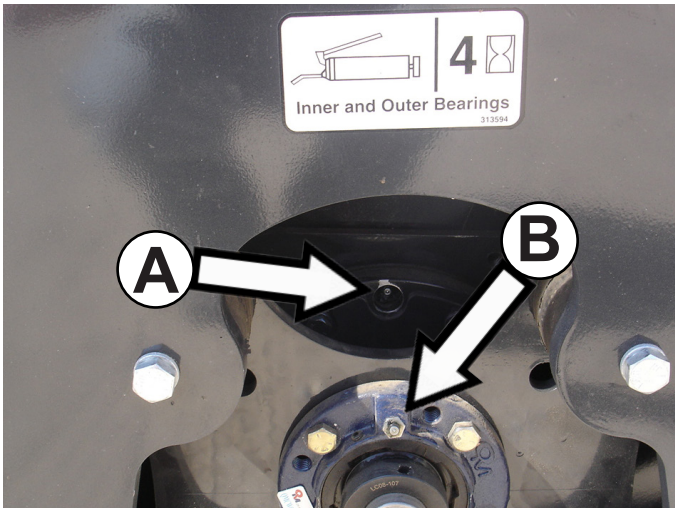

ROUTINE MAINTENANCE

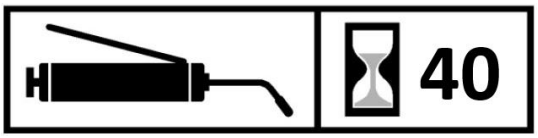

Grease the center oscillation pivot **[C]** every **40 hours** of operation.

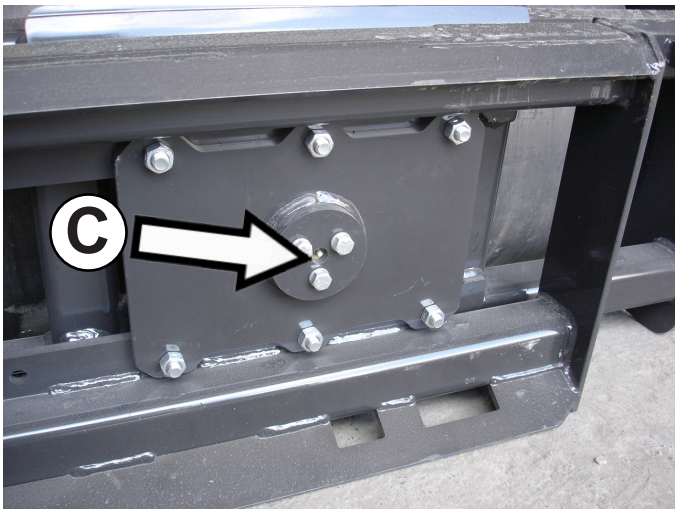

NOTE: The attachment must be disconnected from the loader in order to access this grease zerk

Visually inspect the eight isolation mounts (four on each end) for cuts or tears **weekly**.

IMPORTANT: If a rubber isolation mount has a cut or tear, it must be replaced. If it is not replaced, the remaining good isolation mounts will be put under more load, which will result in premature isolation mount failure.

IMPORTANT: Rubber isolation mounts that have a permanent deformation should be replaced.

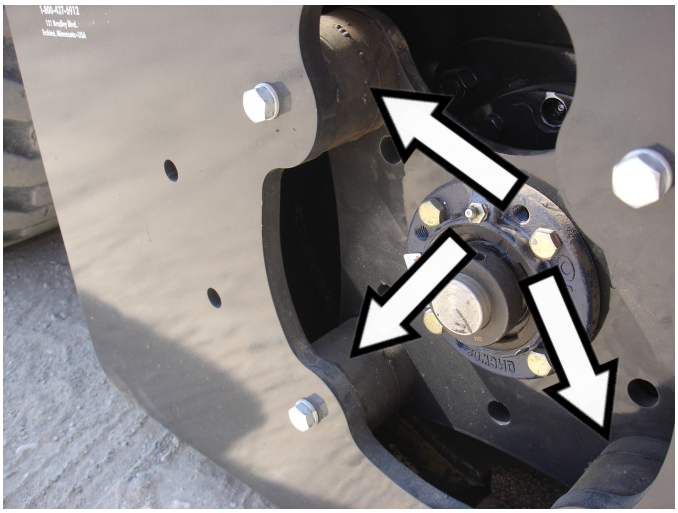

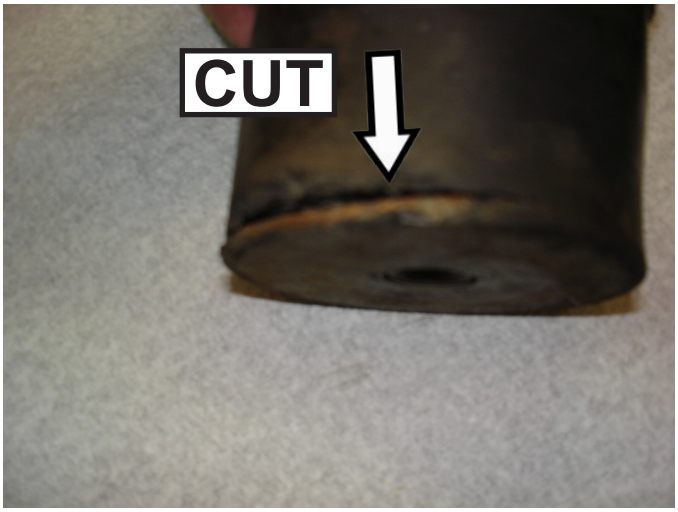

Visually check the drive coupler rubber member for wear every **80 hours** of operation.

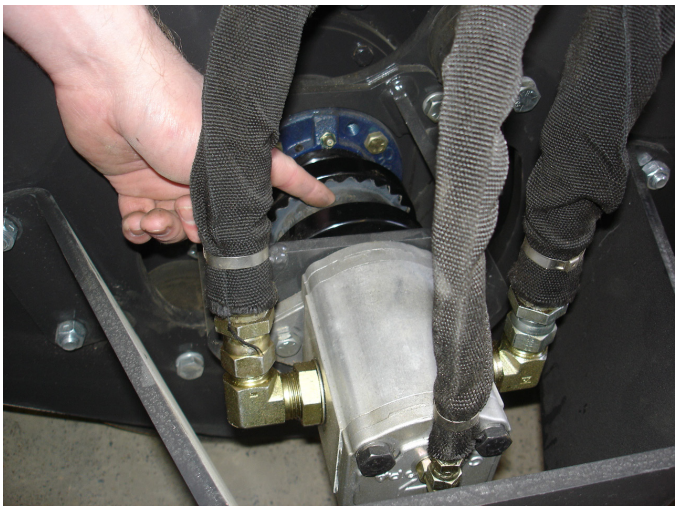

1. Remove the two bolts from the coupler shield.

2. Visually inspect.

3. Grab the coupler and check by hand to see if it feels tight or loose.

NOTE: If the coupler is tight, it is in good operating condition. If the coupler is loose, it is a sign of wear, and replacement may soon be required.

4. Reinstall the coupler shield.

Scraper Maintenance

As the top and bottom scrapers wear, loosen the 3/8” bolts and slide the adjustment plate toward the drum accordingly.

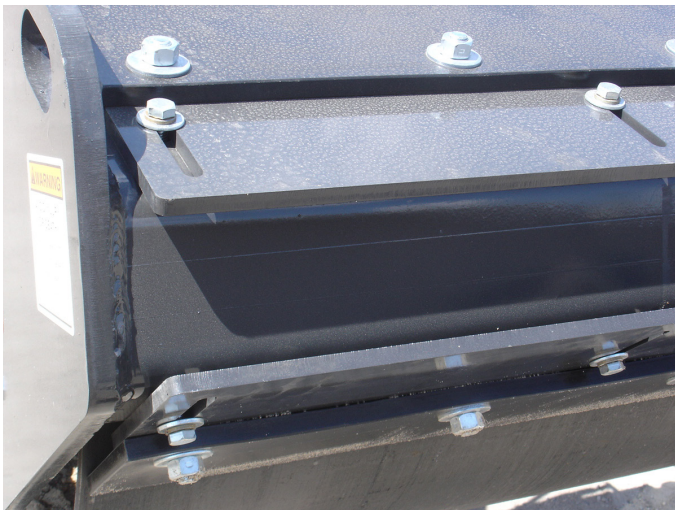

NOTE: The smooth drum scraper is shown. The procedure to adjust the padded drum scraper is the same as the smooth.

TORQUE INFORMATION

Torque-Tension Relationships for SAE J429 Grade Bolts

Nominal Thread Size	SAE J429 Grade 2			SAE J429 Grade 5			SAE J429 Grade 8		
	Clamp Load (lbs)	Tightening Torque		Clamp Load (lbs)	Tightening Torque		Clamp Load (lbs)	Tightening Torque	
		K = .15	K = .20		K = .15	K = .20		K = .15	K = .20
Unified Coarse Thread Series									
1/4-20	1,300	49 in-lbs	65 in-lbs	2,000	75 in-lbs	100 in-lbs	2,850	107 in-lbs	143 in-lbs
5/16-18	2,150	101	134	3,350	157	210	4700	220	305
3/8-16	3,200	15 ft-lbs	20 ft-lbs	4,950	23 ft-lbs	31 ft-lbs	6,950	32.5 ft-lbs	44 ft-lbs
7/16-14	4,400	24	30	6,800	37	50	9,600	53	70
1/2-13	5,850	36.5	49	9,050	57	75	12,800	80	107
9/16-12	7,500	53	70	11,600	82	109	16,400	115	154
5/8-11	9,300	73	97	14,500	113	151	20,300	159	211
3/4-10	13,800	129	173	21,300	200	266	30,100	282	376
7/8-9	11,425	125	166	29,435	321	430	41,550	454	606
1-8	15,000	187.5	250	38,600	482.5	640	54,540	680	900
Unified Fine Thread Series									
1/4-28	1,500	55 in-lbs	75 in-lbs	2,300	85 in-lbs	115 in-lbs	3,250	120 in-lbs	163 in-lbs
5/16-24	2,400	112	150	3,700	173	230	5,200	245	325
3/8-24	3,600	17 ft-lbs	22.5 ft-lbs	5,600	26 ft-lbs	35 ft-lbs	7,900	37 ft-lbs	50 ft-lbs
7/16-20	4,900	27	36	7,550	42	55	10,700	59	78
1/2-20	6,600	41	55	10,200	64	85	14,400	90	120
9/16-18	8,400	59	79	13,000	92	122	18,300	129	172
5/8-18	10,600	83	110	16,300	128	170	23,000	180	240
3/4-16	15,400	144	193	23,800	223	298	33,600	315	420
7/8-14	12,610	138	184	32,480	355	473	45,855	500	668
1-12	16,410	205	273	42,270	528	704	59,670	745	995

Clamp load estimated as 75% of proof load for specified bolts.

Torque values for ¼ and 5/16 inch series are in inch-pounds. All other torque values are in foot-pounds.

Torque values calculated from formula T = KDF

where: K=0.15 for “lubricated” conditions

K=0.20 for “dry” conditions

PARTS INFORMATION

VIBRATORY ROLLER

ITEM	72	80	PART NUMBER	DESCRIPTION	STOCK NO.
1	1	0	313501	FRAME 72 W/A	
	0	1	313503	FRAME 80 W/A	
2	1	0	313508	DRUM 72 SMOOTH W/A	
	0	1	313512	DRUM 80 SMOOTH W/A	
3	1	0	314538	DRUM 72 PADDED W/A	
	0	1	313513	DRUM 80 PADDED W/A	
4	1	1	313506	MOUNT W/A	
5	1	1	313507	PIVOT W/A	
7	1	1	314518	MOTOR MOUNT W/A	
9	1	1	317102	WEAR PLATE PAINTED	
11	1	1	313542	PLATE MOTOR SHIELD PAINTED	
12	1	1	313538	PLATE PIVOT KEEPER PAINTED	
13	2	2	314522	SHIELD COUPLER PAINTED	
14	2	0	313587	PLATE SCRAPER SM 72 PAINTED	
	0	2	313529	PLATE SCRAPER SM 80 PAINTED	
15	2	0	313530	SCRAPER SM 72 URETHANE	
	0	2	313530	SCRAPER SM 80 URETHANE	
16	2	0	313523	PLATE SCRAPER PD 72 PAINTED	
	0	2	313527	PLATE SCRAPER PD 80 PAINTED	
30	1	1	313576	COUPLER 7S 3/4"	
31	1	1	313575	COUPLER 7S 1-1/8"	
32	1	1	313574	COUPLER 7JN	
37	1	1	300251	KEY SQ ¼ X 1	
38	1	1	60105	ZERK GREASE 1/4-28 UNF STR	
42	8	8	13105	BOLT HEX	3/8 X 1 - UNC - GR 5
44	14	16	103879	BOLT HEX	3/8 X 1.5 - UNC - GR 5
45	2	2	13159	BOLT HEX	7/16 X 1.5 - UNC - GR 5
48	3	3	13207	BOLT HEX	1/2 X 1-1/4 - UNC - GR 5
49	20	22	13209	BOLT HEX	1/2 X 1-1/2 - UNC - GR 5
50	9	9	13210	BOLT HEX	1/2 X 1-3/4 - UNC - GR 5
51	6	6	13311	BOLT HEX	5/8 X 2 - UNC - GR 5
53	2	2	37213	NUT HEX	7/16 - UNC - GR 5 - REV LOCK
54	20	22	37214	NUT HEX	1/2 - UNC - GR 5 - REV LOCK
55	6	6	37216	NUT HEX	5/8 - UNC - GR 5 - REV LOCK
57	42	45	103880	WASHER LOCK	3/8 - GR 5
59	28	28	33626	WASHER LOCK	1/2 - GR 5
61	14	16	33008	WASHER FLAT	3/8 - USS - GR 5
62	32	34	33012	WASHER FLAT	1/2 - USS - GR 5
63	1	1	313593	WASHER FLAT	3/8 WASHER ¼ GR50
64	1	1	410374	KEY SQ 3/16 X 1	

PARTS INFORMATION

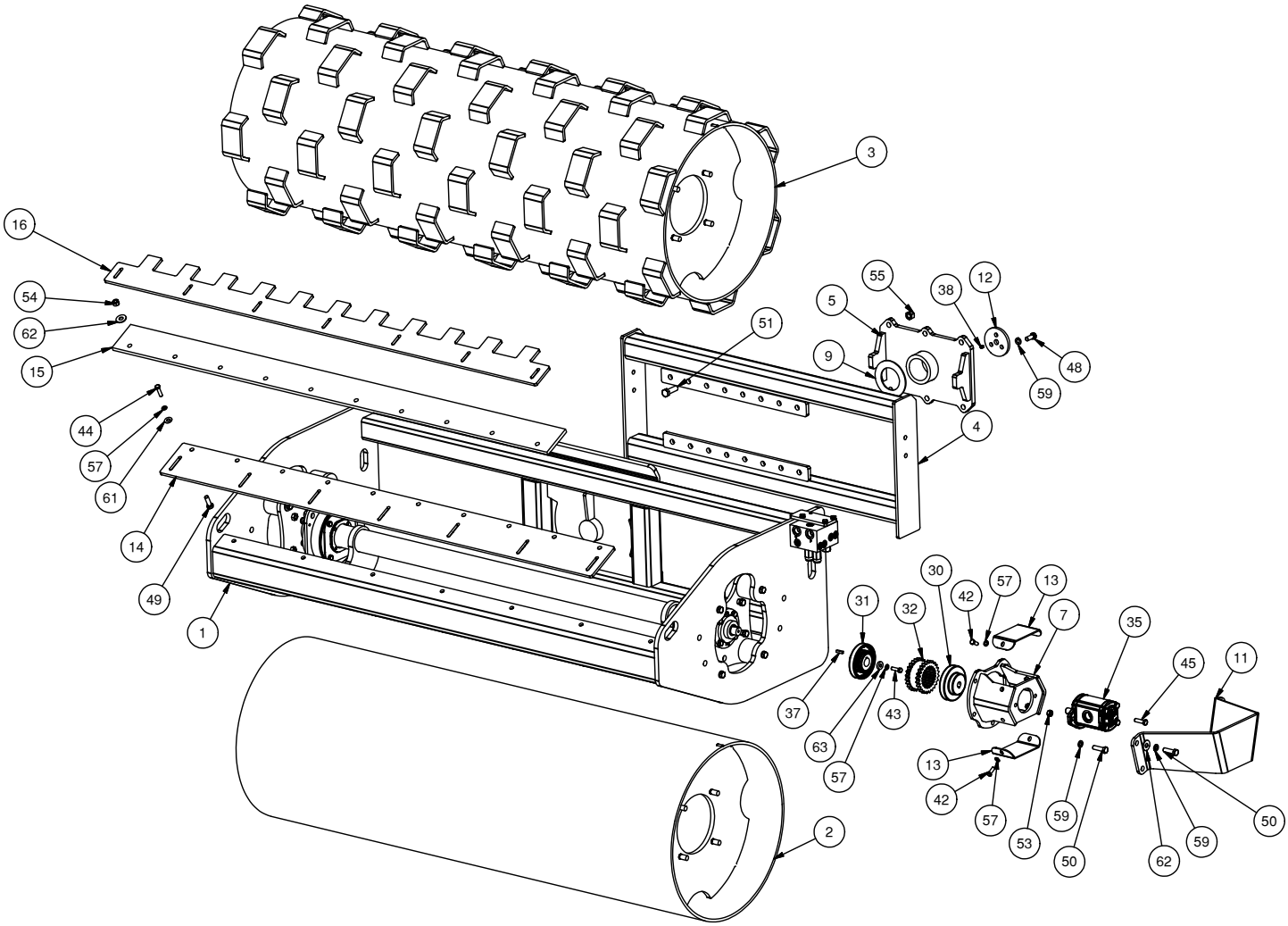

PARTS INFORMATION

SHAFT AND BEARING ASSEMBLY

ITEM	72	80	PART NUMBER	DESCRIPTION	STOCK NO.
6	1	0	313510	SHAFT 72 W/A	
	0	1	313509	SHAFT 80 W/A	
8	2	2	314510	PLATE ISOLATION MOUNT W/A	
17	2	2	314521	BEARING HOUSING MACHINED	
18	2	2	313511	BRG DRUM	
19	2	2	313580	BRG TAPER ADAPTER	
20	1	1	313540	TUBE BRG SPACER	
21	1	1	313551	TUBE BRG SPACER MOTOR SIDE	
22	2	2	314507	SEAL BRG INNER	
23	2	2	314506	SEAL BRG OUTER	
24	2	2	314505	PLATE BRG SEAL INNER	
25	2	2	314504	PLATE BRG SEAL OUTER	
26	2	2	313581	PLATE BRG COVER INNER	
27	2	2	313550	PLATE BRG COVER OUTER	
28	8	8	314525	MOUNT RUBBER	
29	2	2	313568	BRG 1-7/16 SPHERICAL W/FLANGE	
38	2	2	60105	ZERK GREASE 1/4-28 UNF STR	
39	16	16	62180	RIVET 3/16 X 3/8 CLOSED	
40	2	2	25396	SET SCREW	1/4 X 0.25 - UNF - GR 5
41	8	8	13103	BOLT HEX	3/8 X 0.75 - UNC - GR 5
43	13	13	13107	BOLT HEX	3/8 X 1.25 - UNC - GR 5
46	8	8	13160	BOLT HEX	7/16 X 1.75 - UNC - GR 5
47	16	16	17207	BOLT HEX	1/2 X 1-1/4- UNF - GR 5
52	8	8	36108	NUT HEX	7/16 - UNC - GR 5 - REG
56	8	8	36464	NUT HEX FULL	5/8 - UNF - GR 8 - REG
57	21	21	103880	WASHER LOCK	3/8 - GR 5
58	8	8	33624	WASHER LOCK	7/16 - GR 5
59	28	28	33626	WASHER LOCK	1/2 - GR 5
60	8	8	33897	WASHER LOCK	5/8 - GR 8
62	32	34	33012	WASHER FLAT	1/2 - USS - GR 5

PARTS INFORMATION

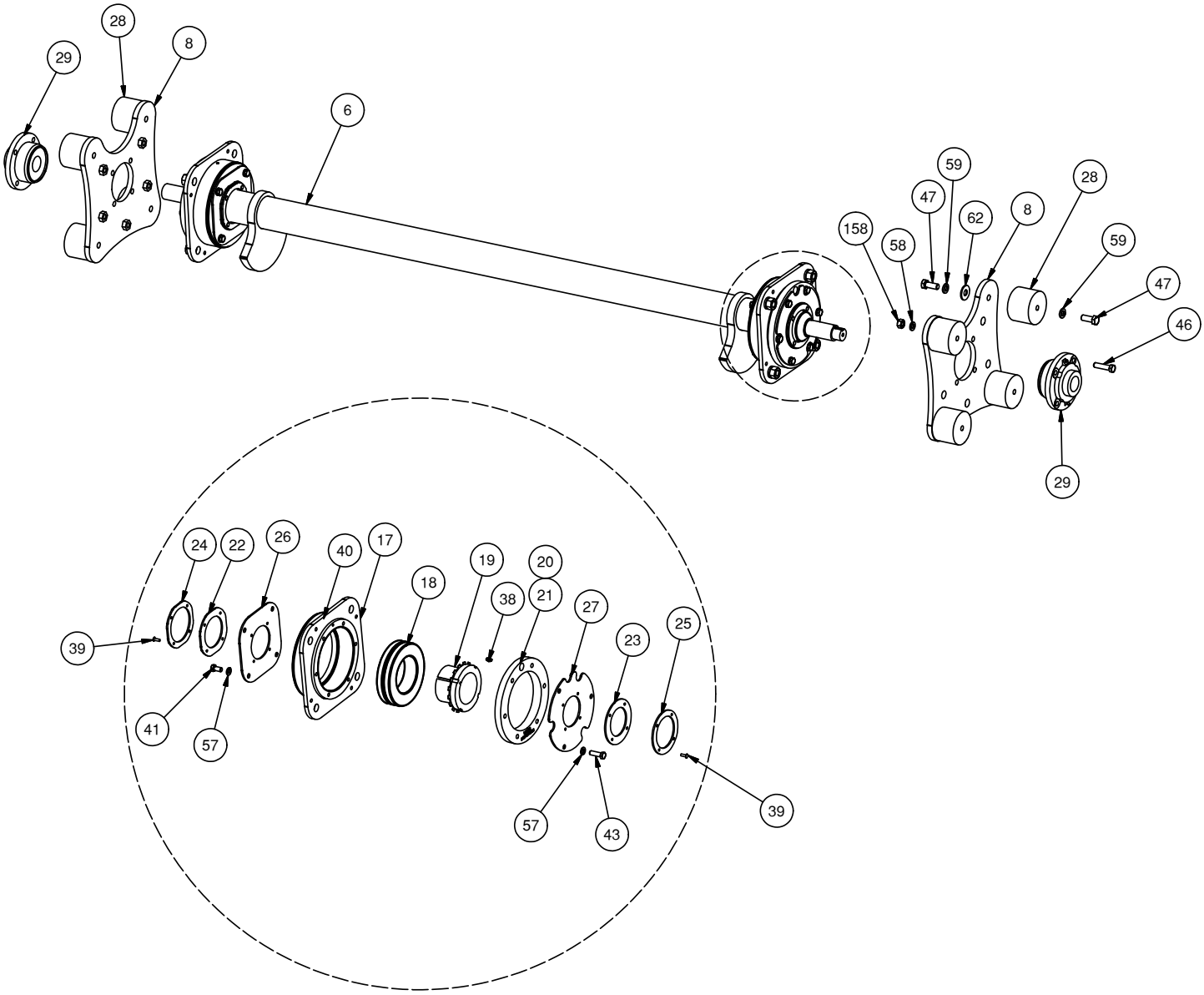

PARTS INFORMATION

HYDRAULICS

ITEM	QTY	PART NUMBER	DESCRIPTION	STOCK NO.
33:1	2	313595	HOSE 5/8 X 58 12FJX-10FJX-90	LEAD
33:2	1	313596	HOSE 1/2 X 17 10MB-10FJX	MOTOR TO VALVE
33:3	1	313597	HOSE 1/2 X 22 10MB-10FJX	MOTOR TO VALVE
33:4	1	330894	HOSE 1/2 X 80 6FJX-8FJX	**CD (REPLACED 314540)**
	1	314540	HOSE 1/4 X 80 4FJX-6FJX	**CD (REPLACED BY 330894)**
	1	313598	HOSE 1/4 X 20 6MB-4FJX	**CD (REPLACED BY 314540)**
33:5	1	330919	ADPT ELBOW 4MB-6MJ-90	**REPLACED 103497**
	1	103497	ADPT ELBOW 4MB-4MJ-90	**REPLACED BY 330919**
33:6	2	300215	ADPT ELBOW 12MB-10MJ -90	
33:7	2	201852	ADPT STRAIGHT 10MB-10MJ	
34	1	300501	VALVE BLOCK	
35	1	313545	MOTOR	
	1	314527	SEAL KIT – MOTOR	**PARTS ONLY**

VALVE ASSEMBLY

ITEM	QTY	PART NO.	DESCRIPTION	STOCK NO.
2	2	314536	VALVE – check	
3	2	316118	LOGIC ELEMENT	
4	2	300505	VALVE – pressure relief	

PARTS INFORMATION

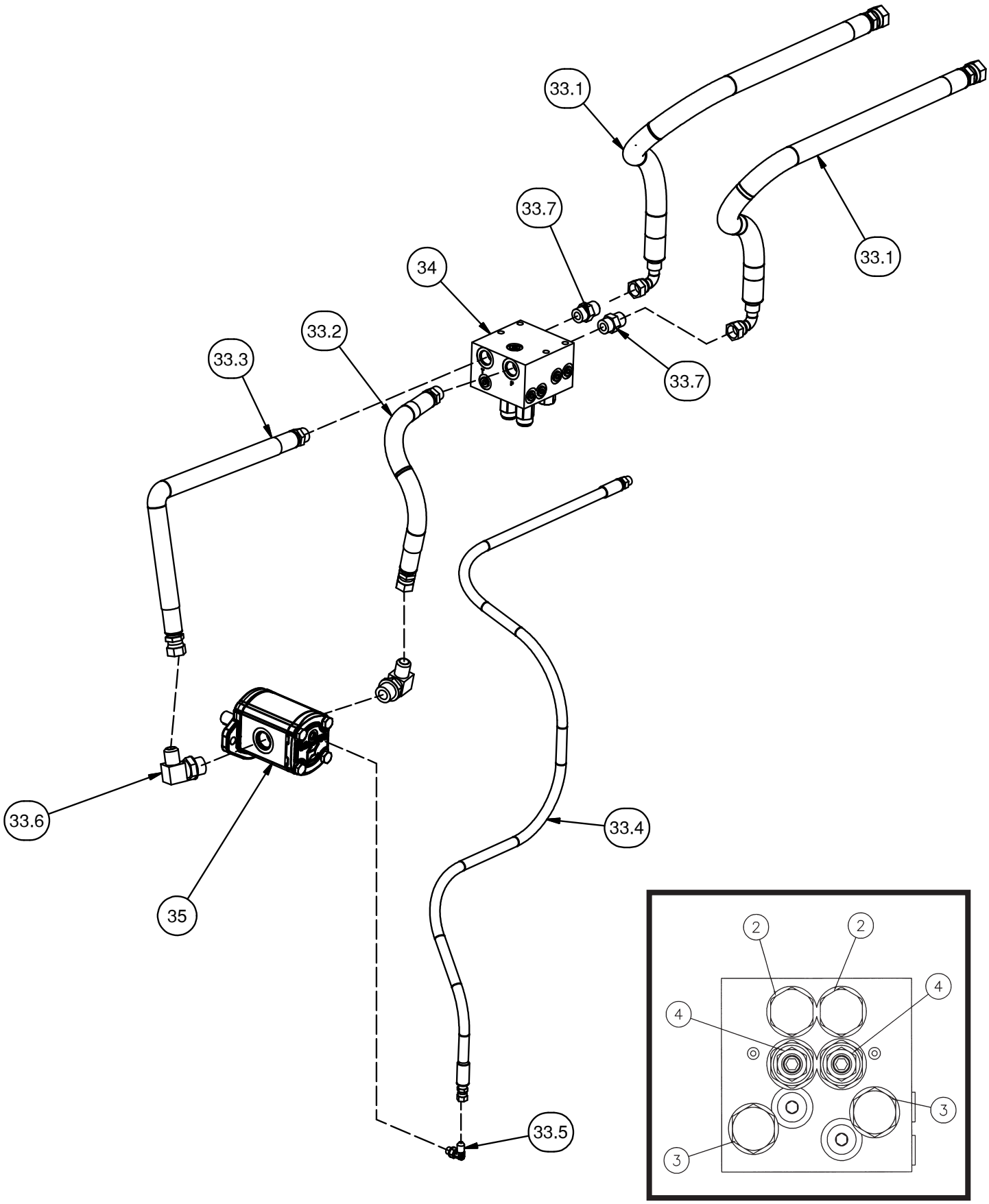

GENERAL SPECS

Model	72 SMOOTH	72 PADDED	80 SMOOTH	80 PADDED
Working Width – Straight	72"	72"	80”	80”
Dynamic Force	3723 lb.	3723 lb.	3723lb.	3723lb.
Amplitude	.06"	.06"	.06"	.05"
Dynamic Linear Force	51 lb./in.	207 lb./in.	47 lb./in.	191 lb./in.
Compacting Energy	174 lbf.*in.	157 lbf.*in.	167 lbf.*in.	151 lbf.*in.
Vibrations per Minute	2000* vpm	2000* vpm	2000* vpm	2000* vpm
Hydraulic Flow Range	11-22* gpm	11-22* gpm	11-22* gpm	11-22* gpm
Operating Weight	1720 lbs.	1870 lbs.	1880 lbs.	2025 lbs.

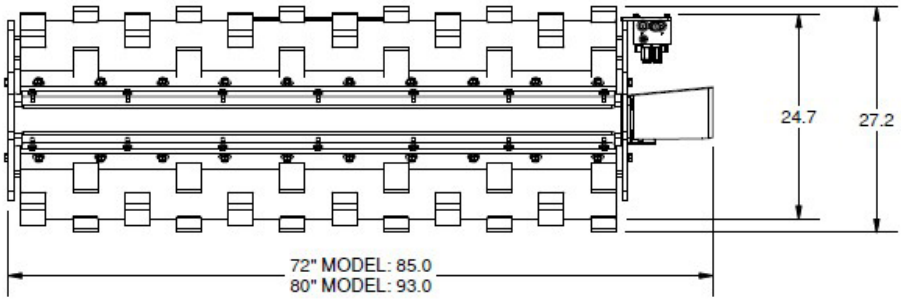

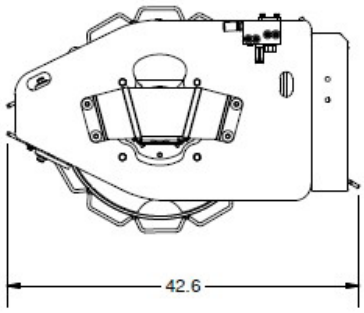

ALL DIMENSIONS IN INCHES

*The valve block limits the flow to the motor so the max speed is 2000 rpm at 18 gpm

NOTES

NOTES

LIMITED WARRANTY

Erskine Attachments, LLC warrants each new machine manufactured by us to be free from defects in material and workmanship for a period of twenty-four (24) months from date of delivery to the original purchaser.

Our obligation under this warranty is to replace free of charge, at our factory or authorized dealership, any part proven defective within the stated warranty time limit.

All parts must be returned freight prepaid and adequately packaged to prevent damage in transit.

This warranty does not cover:

1. New products which have been operated in excess of rated capacities or negligence
2. Misuse, abuse, accidents or damage due to improperly routed hoses
3. Machines which have been altered, modified or repaired in any manner not authorized by our company
4. Previously owned equipment
5. Any ground engaging tools in which natural wear is involved, i.e. tooth tips, cutting teeth, etc
6. Normal maintenance
7. Fork tines
8. Hydraulic motors that have been disassembled in any manner

In no event will the Sales Representative, Dealership, Erskine Attachments, LLC, or any other company affiliated with it or them be liable for incidental or consequential damages or injuries, including but not limited to the loss of profit, rental or substitute equipment or other commercial loss. Purchaser's sole and exclusive remedy being as provided here in above.

Erskine Attachments, LLC must receive immediate notification of defect and no allowance will be made for repairs without our consent or approval.

This warranty is in lieu of all other warranties, express or implied by law or otherwise, and there is no warranty of merchantability or fitness purpose.

No agent, employee, or representative of Erskine Attachments, LLC has any authority to bind Erskine Attachments, LLC to any warranty except as specifically set forth herein. Any of these limitations excluded by local law shall be deemed deleted from this warranty; all other terms apply.

This warranty may not be enlarged or modified in any manner except in writing signed by an executive officer of Erskine Attachments, LLC to improve its products whenever it is possible and practical to do so. Erskine Attachments, LLC reserves the right to make changes and or add improvements at any time without incurring any obligation to make such changes or add such improvements to products previously sold.

Erskine Attachments, LLC
P.O. Box 1083 Alexandria, MN 56308
Phone (218) 435-4045

ERSKINE®

ATTACHMENTS LLC