30K PIPE LIFTER

- HANDLES 8 FT. SECTIONS OF PIPE
- NARROW DESIGN ACCOMMODATES 18"I.D. PIPE TO 30,000 LB PIPE
- REPLACEABLE 4"X36" URETHANE GRIPPING PADS
- T-1 STEEL CONSTRUCTION

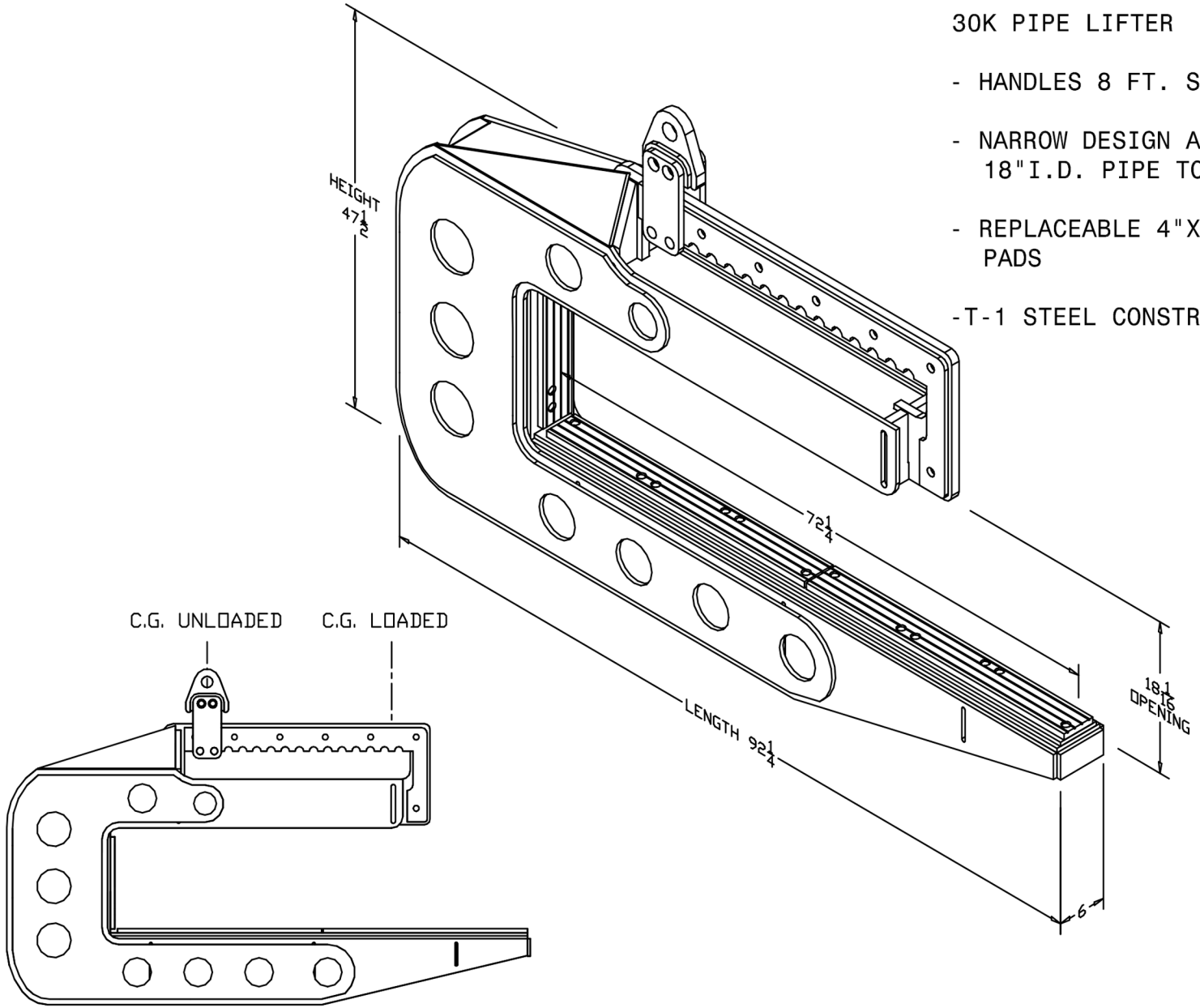

DRAWN BY:		KENCO CORP. 170 STATE ROUTE 271 LIGONIER PA 15658	(800)653-6069 WWW.KENCO.COM	WEIGHT	DESCRIPTION	PART NO.
Brad Shurina	KENCO Attachment Solutions	THE INFORMATION PROVIDED WITHIN THIS DRAWING IS THE PROPERTY OF KENCO CORP. ANY REPRODUCTION, TRANSMITTAL, OR USAGE OF ANY KIND IS PROHIBITED WITHOUT WRITTEN PERMISSION.		1420 LB	30K PIPE LIFTING DEVICE	009-030-001
DATE:				CAPACITY		REVISION
12-30-2004				30,000 lbs		